Leon Paul
London

Leon Paul BSC Cadet Epee

Information

Entry limit = 72

2 rounds of poules

Cut to 64 fencers after 2nd poule round.

Repechage from L32.

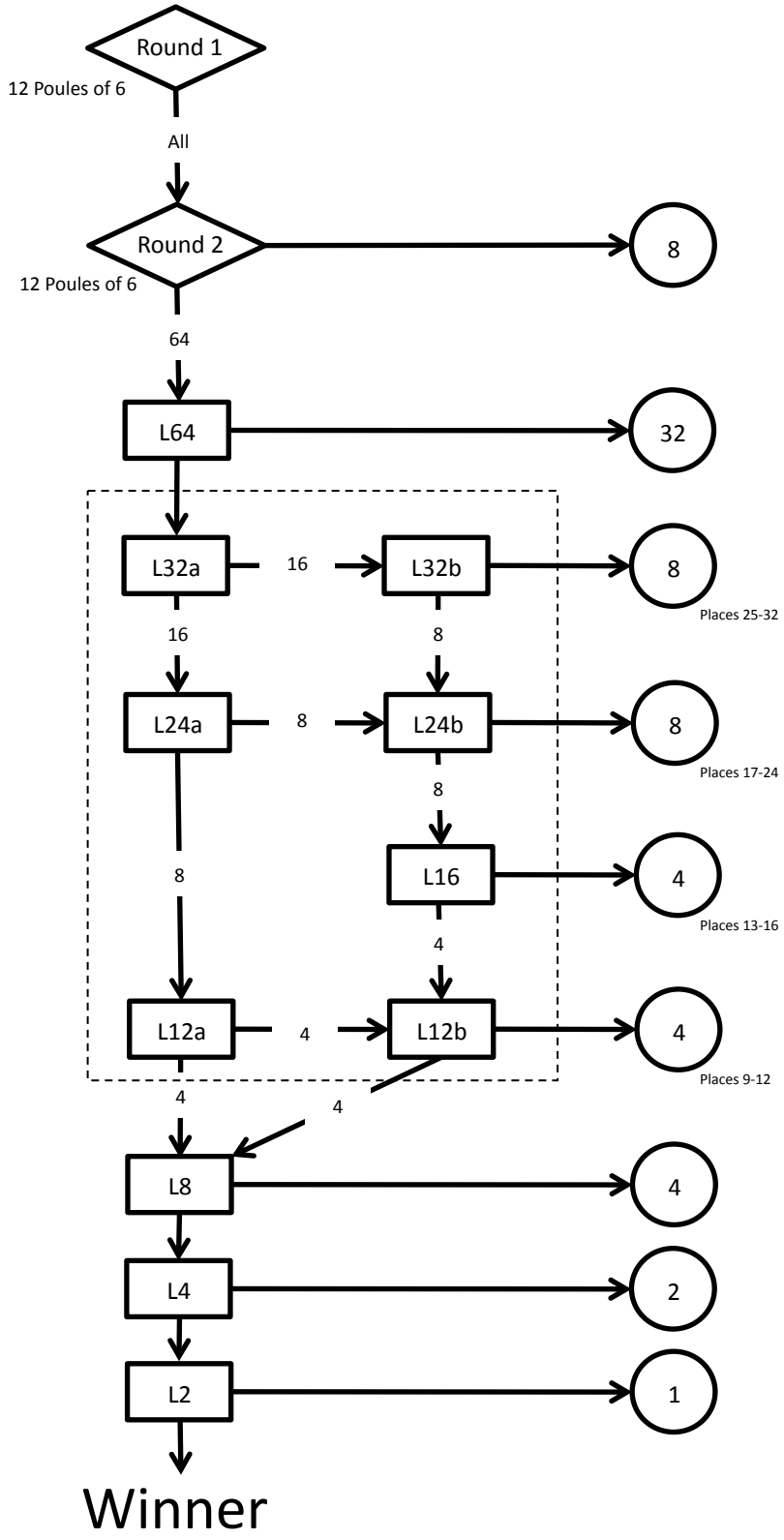

Key

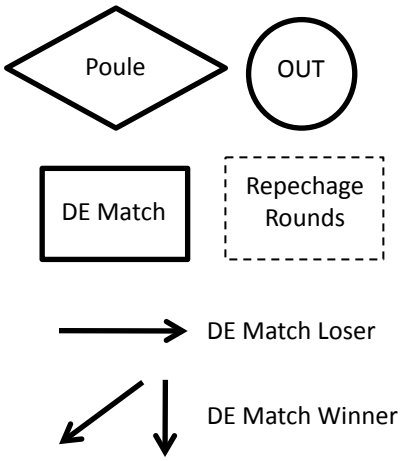

The organisers retain the right to change the format of the competition.

Leon Paul London

Timetable

Time	Event/Round
08:00	Doors Open
08:15	
08:30	
08:45	
09:00	Check-in closes
09:15	
09:30	Round 1 - 12 poules of 6
09:45	
10:00	
10:15	
10:30	
10:45	
11:00	
11:15	Round 2 - 12 poules of 6
11:30	
11:45	
12:00	
12:15	
12:30	
12:45	
13:00	L64 on 12 pistes
13:15	
13:30	
13:45	
14:00	L32a with Repecharge on 8 pistes
14:15	(2-5 & 8-11)
14:30	
14:45	L24a on 8 pistes (2-5 & 8-11)
15:00	L32b on 8 pistes (2-5 & 8-11)
15:15	L12a on 4 pistes (2-5)
15:30	L24b on 8 pistes (2-5 & 8-11)
15:50	L16 on 4 pistes (2-5)
16:10	L12b on 4 pistes (2-5)
16:30	L8 on 4 psites (2-5)
16:45	
17:00	L4 on 2 pistes
17:15	
17:30	Final

The organisers retain the right to change the format of the competition.
Following the completion of the poule round, the competition will run ahead of schedule if possible.